Kroy Building Products, Inc.
6501 Weston Parkway, Suite 250
Cary, North Carolina, 27513
(910) 649-7501

1.0 Subject

Kroy Vinyl Railing Systems:

Kroy Performance Vinyl Railing

Assurance Outdoor Solutions™

Kroy Express Outdoor Solutions™

2.0 Research Scope

2.1. Building codes:

2000, 2003 International Building Code (IBC)

2000, 2003 International Residential Code (IRC)

2.2. Properties:

Structural performance

Durability

Surface Burning

3.0 Description

3.1. General – Kroy Vinyl Railing Systems are guards under the definitions of the referenced codes intended for use on elevated walking areas in buildings and walkways as required by the codes.

3.2. Guard Assemblies - Railing systems are provided as level guards for level walking areas such as decks, balconies and porches, and sloped guards for open sides of stairways.

3.2.1. Level guards with a 36-inch overall installed height are provided in lengths up to 10 feet (120-inches). Guards with a 42-inch overall installed height are provided in lengths up to 8 feet (96-inches). See Table 1 - Maximum Railing System Size and Code Recognition.

3.2.2. Stair guards are provided in lengths up to 8 feet (96 inches) sloping length with a height up to that corresponding to a 42 inch level rail. See Table 1 - Maximum Railing System Size and Code Recognition.

3.3. Materials and Processes - Railings are an assemblage of extruded and molded components utilizing Poly Vinyl Chloride (PVC) material and aluminum reinforcements. Vinyl components are produced in one color (white). All systems consist of the following components:

3.3.1. The top and bottom rails are extruded PVC profiles of various styles.

3.3.2. Balusters are extruded PVC profiles in various dimensions. Some extrusions are reshaped by a thermoform process to simulate a turned spindle design. See Table Table 4 for a list of styles.

3.3.3. An extruded aluminum (6105-T5 or 6005-T5) insert provides reinforcement for the top and bottom rails. Bottom rail reinforcement is utilized only in level rail lengths exceeding 8-feet and all stair rails (See Table 2 and Table 3).

3.3.4. Top and bottom rails are connected to posts with molded plastic brackets that are secured to the supports with stainless steel screws. Screws are general purpose wood screws with a "Hi-Lo" thread.

3.4. Supports - Railing systems can be attached to conventional wood supports or a structural PVC post installed with an aluminum or steel post-mount tower.

3.4.1. A PVC post sleeve that is non-structural is provided as a cladding over conventional 4x4 wood posts.

3.4.2. Structural 4"x4" PVC posts are supported by an UltiMount II™ post mount system or by an aluminum tower mount as permitted by Table 7.

3.4.3. Non-structural PVC posts are identified as 4x4 STD Post and have a wall thickness of 0.135". Structural PVC posts are identified as 4x4 RW Post and have a wall thickness of 0.170".

3.4.4. Railing systems include a bottom rail intermediate support located beneath the rail at mid-span (See Figure 11). Exceptions: The following systems do not require intermediate supports:

1. Systems with aluminum inserts in the bottom rail.
2. Stair rails

4.0 Performance Characteristics

4.1. *Kroy* vinyl railing systems have demonstrated the capacity to resist the design loadings specified in Chapter 16 of the IBC when tested in accordance with ICC-ES AC174.

4.2. Structural performance has been demonstrated for a temperature range from -20°F to 125°F.

4.3. Materials used are deemed equivalent to preservative treated or naturally durable wood for resistance to weathering effects, decay, and attack from termites.

4.4. The PVC materials used have a flame spread index of 40 when tested according to ASTM E 84. The referenced criteria, AC174, requires a flame spread index not exceeding 200.

5.0 Installation

Installation shall be in accordance with the manufacturer's installation instructions and this report. Where differences occur between this report and the manufacturer's installation instructions, this report shall govern.

5.1. Railing assemblies consist of top and bottom rails with pre-routed holes to receive balusters. Aluminum railing reinforcements are inserted in the rails during assembly as specified for the type and length of railing (See Table 2 and Table 3).

5.2. Railings attached to wood supports with molded PVC brackets utilize stainless steel "Hi-Lo" wood screws for anchorage. The wood in the supporting structure shall have a specific gravity of 0.50 or greater (Southern Yellow Pine or better) and a minimum thickness to allow full penetration of the bracket mounting screws. Bracket attachment shall be in accordance with Table 5 – Rail Bracket Fastening Schedule.

5.3. The Kroy Aluminum Post Tower shall be installed in wood decks in accordance with the manufacturer's installation instructions and Figure 13.

5.4. The UltiMount II™ post mount system may be mounted in a wood deck or anchored to concrete and/or steel with approved anchors. Installation in wood decks shall be in accordance with the manufacturers installation instructions and Figure 12.

5.4.1. The UltiMount II™ post mount system anchors used in concrete or steel installation are not within the scope of this report and are subject to evaluation and approval by the building official. Anchors must satisfy the design load requirements specified in Chapter 16 of the building code and must meet the following minimum requirements.

5.4.2. A minimum of four anchor bolts must be used and located in the four pre-drilled holes in the post base plate.

5.4.3. The anchors must be stainless steel or other approved material compatible with aluminum.

5.4.4. The anchors must have a minimum diameter equal to 5/16".

5.4.5. Where required by the building official, engineering calculations and details shall be provided. The calculations shall verify that the anchorage complies with the building code for the type and condition of the supporting construction.

5.5. Compatibility of fasteners and other installation hardware with the supporting construction including treated wood is not within the scope of this report.

6.0 Supporting Evidence

6.1. Manufacturer's drawings and installation instructions.

6.2. Reports of testing and engineering analysis demonstrating compliance with the performance requirements of ICC-ES Acceptance Criteria for Deck Board Span Ratings and Guardrail Systems (Guards and Handrails), AC174 effective July 1, 2006.

6.3. Quality control manual in accordance with ICC-ES Acceptance Criteria for Quality Control Manuals, AC10.

7.0 Conditions of Use

The guardrail assemblies identified in this report are deemed to comply with the intent of the provisions of the referenced building codes subject to the following conditions.

7.1. Guardrails are limited to use in residential use groups (Group R) of Type V-B construction. Some systems are further limited to use in One- and Two Family Dwellings (IRC) as indicated in Table 1.

7.2. Conventional wood guardrail supports are not within the scope of this report and are subject to evaluation and approval by the building official. Supports must satisfy the design load requirements specified in Chapter 16 of the IBC and must provide suitable material for anchorage of the rail brackets. Where required by the building official, engineering calculations and details shall be provided.

7.3. Compatibility of fasteners, post mount brackets, and other metallic components with the supporting structure, including chemically treated wood, is not within the scope of this report.

7.4. Kroy Vinyl Railing Systems are manufactured in Fair Bluff, North Carolina or York, Nebraska in accordance with the manufacturer's approved quality control system with inspections by Architectural Testing, Inc. (AA-676).

8.0 Identification

The vinyl guardrail assemblies produced by Kroy Building Products, Inc. and identified in this report shall be identified with labeling on the individual components or the packaging that includes the name and/or trademark of the manufacturer, the identifying mark of the independent inspection agency, Architectural Testing, Inc. (AA-676) and, the ATI Code Compliance Research Report Number (CCRR-0106).

9.0 Code Compliance Research Report Use

9.1. Approval of building products and/or materials can only be granted by a building official having legal authority in the specific jurisdiction where approval is sought.

9.2. Code Compliance Research Reports shall not be used in any manner that implies an endorsement of the product by ATI.

9.3. Reference to the Architectural Testing internet web site address at www.archtest.com is recommended to ascertain the current version and status of this report.

Table 1 - Maximum Railing System Size and Code Recognition

Kroy Performance Vinyl Railing	**Code Recognition**	
	Maximum Railing Size (Length x Height)[1]	
	IBC [2]	**IRC**
2" x 3-1/2" Open STD	8' x 42" Level 8-ft. Stair	10' x 36" Level 8-ft. Stair
3-1/2" x 3-1/2" T-Rail	8' x 42" Level 8-ft. Stair	10' x 36" Level 8-ft. Stair
2" x 3-1/2" Open RW	8' x 42" Level 6-ft. Stair	8' x 42" Level 6-ft. Stair
2-3/4" x 3-1/4" Contoured Rail	8' x 42" Level 94" Stair	10' x 36" Level 94" Stair
2-1/4" x 3" Small Contour	8' x 42" Level 94" Stair	10' x 36" Level 94" Stair
3" x 3" Open RW	8' x 42" Level	10' x 36" Level

[1] Railing lengths are clear length between supports. Railing height is installed height from walking surface to top of top rail.
Minimum bottom rail clearance is 2-1/2"
[2] Code recognition for the IBC is limited to Residential use groups.

Table 2 – Level Railing System Descriptions

Kroy Performance Vinyl Railing	**Level Railing System Components** (See Table 4 for available balusters)	
	Rails	**Brackets**
2" x 3-1/2" Open STD	Top: 2x3-1/2" STD Open with Alum "H" channel Btm: 2x3-1/2" STD Open (Alum "H" Channel in lengths exceeding 8 feet.)	Top: OEM or MOD Btm: OEM or MOD
3-1/2" x 3-1/2" T-Rail	Top: T-Rail with Alum "H" channel Btm: 2x3-1/2" STD Open (Alum "H" Channel in lengths exceeding 8 feet.)	Top: OEM Btm: OEM or MOD
2" x 3-1/2" Open RW	Top: 2x3-1/2" RW Open with Alum "P" channel Btm: 2x3-1/2" RW Open	Top: OEM or MOD Btm: OEM or MOD
2-3/4" x 3-1/4" Contoured Rail	Top: York Open Contoured with York Open Rail Alum Insert Btm: 2x3-1/2" STD Open (Alum "H" Channel in lengths exceeding 8 feet.)	Top: York Bracket Btm: OEM or MOD
2-1/4" x 3" Small Contour	Top: Small Contoured Open with Small Contoured Alum insert Btm: 2x3-1/2" STD Open (Alum "H" Channel in lengths exceeding 8 feet.)	Top: Two-Piece Contoured Btm: OEM or MOD
3" x 3" Open RW	Top: 3x3 RW Open with 3"x3" Alum. "H" Channel Btm: 3x3 RW Open (3"x3" Alum. "H" Channel in lengths exceeding 8 feet.)	Top: 3"x3" Chamfered Btm: 3"x3" Chamfered

Table 3 – Stair Railing System Descriptions

Kroy Performance Vinyl Railing	**Stair Railing System Components** (See Table 4 for available balusters)	
	Rails	**Brackets**
2" x 3-1/2" Open STD	Top: 2x3-1/2" STD Open with Alum "H" channel Btm: 2x3-1/2" STD Open with Alum "H" Channel	Top & Btm: OEM
3-1/2" x 3-1/2" T-Rail	Top: T-Rail with Alum "H" channel Btm: 2x3-1/2" STD Open with Alum "H" Channel	Top:T-Rail Stair Bracket Btm: OEM
2" x 3-1/2" Open RW	Top: 2x3-1/2" RW Open with Alum "P" channel Btm: 2x3-1/2" RW Open with Alum "P" channel	Top & Btm: OEM
2-3/4" x 3-1/4" Contoured Rail	Top: York Open Contoured with York Open Rail Alum Insert Btm: 2x3-1/2" STD Open with Alum "H" Channel	Top: York Stair Bracket Btm: OEM
2-1/4" x 3" Small Contour	Top: Small Contoured Open with Small Contoured Alum insert Btm: 2x3-1/2" STD Open with Alum "H" Channel	Top: Small Contoured Stair Bracket Btm: OEM

Table 4 - Balusters

Baluster Style
3/4" x 1-1/2" RW PVC Picket
1-1/2" PVC Spindle
1-1/2" PVC Baluster
1-1/2" Square STD PVC Picket
1-1/4" Square RW PVC Picket
1-3/8" Square RW PVC Picket
1-3/8" Square STD PVC Picket
1" x 2" RW PVC Picket
2" PVC Baluster [1]
1-3/4" Square RW PVC Picket [1]

[1] The 2" and 1-3/4" Balusters are available for the 3"x3" rail system only

Table 5 – Rail Bracket Fastening Schedule

Rail – Bracket Combination	Bracket to Post	Rail to Bracket
2" x 3-1/2" Open STD Rail with OEM Bracket	(4) #12 x 1-1/4" Stainless Steel Screws	(2) #8 x 3/4" self-tapping screws
2" x 3-1/2" Open STD Rail with MOD Bracket	(6) #12 x 1-1/4" Stainless Steel Screws	(2) #8 x 3/4" self-tapping screws
3-1/2" x 3-1/2" T-Rail with OEM Bracket	(4) #12 x 1-1/4" Stainless Steel Screws [(2) Round Head & (2) Flat Head]	(2) #8 x 3/4" self-tapping screws
3-1/2" x 3-1/2" T-Rail with T-Rail Stair Bracket	(2) #10 x 4" Stainless Steel Screws	(2) #8 x 3/4" self-tapping screws
2" x 3-1/2" Open RW Rail with OEM Bracket	(4) #12 x 1-1/4" Stainless Steel Screws	(2) #8 x 3/4" self-tapping screws
2" x 3-1/2" Open RW Rail with MOD Bracket	(6) #12 x 1-1/4" Stainless Steel Screws	(3) #8 x 3/4" self-tapping screws
2-3/4" x 3-1/4" Open Contoured Rail with York Bracket	(4) #12 x 1-1/4" Stainless Steel Screws	(2) #8 x 3/4" self-tapping screws
2-3/4" x 3-1/4" Open Contoured Rail with York Stair Bracket	(4) #10 x 4" Stainless Steel Screws	(2) #8 x 3/4" self-tapping screws
2-1/4" x 3" Small Contour Rail w/ Two-Piece Contoured Bracket	(4) #10 x 1-1/2" Stainless Steel Screws	(2) #8 x 3/4" self-tapping screws
2-1/4" x 3" Small Contour Rail w/ Small Contoured Stair Bracket	(2) #10 x 4" Stainless Steel Screws	(2) #8 x 3/4" self-tapping screws
3" x 3" Open RW Rail with 3"x3" Chamfered Bracket	(4) #10 x 2" Stainless Steel Screws	(2) #8 x 3/4" self-tapping screws

Table 6 - Alternate Railing System Identifications [1]

Kroy Performance Vinyl Railing	*Assurance Outdoor Solutions™*	*Kroy Express Outdoor Solutions™*
2" x 3-1/2" Open STD	2" x 3-1/2" Standard Rail Kit	2" x 3-1/2" Standard Rail Kit
3-1/2" x 3-1/2" T-Rail	3-1/2" x 3-1/2" T-Rail Kit	3-1/2" x 3-1/2" T-Rail Kit

[1] Each row represents an identical railing system and its identification under the product series name given in the column heading.

Table 7 – Post Mounts

Post Mounting System	**Code Recognition**	
	Maximum Supported Railing Length and Height	
	IBC [2]	**IRC**
UltiMount II surface mounted to concrete or steel	6-ft Length 42" Height	10-ft. Length 42" Height
UltiMount II installed on a wood deck (See Figure 12)	N.A.	10-ft. Length 36" Height
Aluminum Tower Mount installed in a wood deck (See Figure 13)	N.A.	10-ft. Length 36" Height

[1] Railing lengths are clear length between supports. Railing height is installed height from walking surface to top of top rail.
Minimum bottom rail clearance is 2-1/2"
[2] Code recognition for the IBC is limited to Residential use groups.

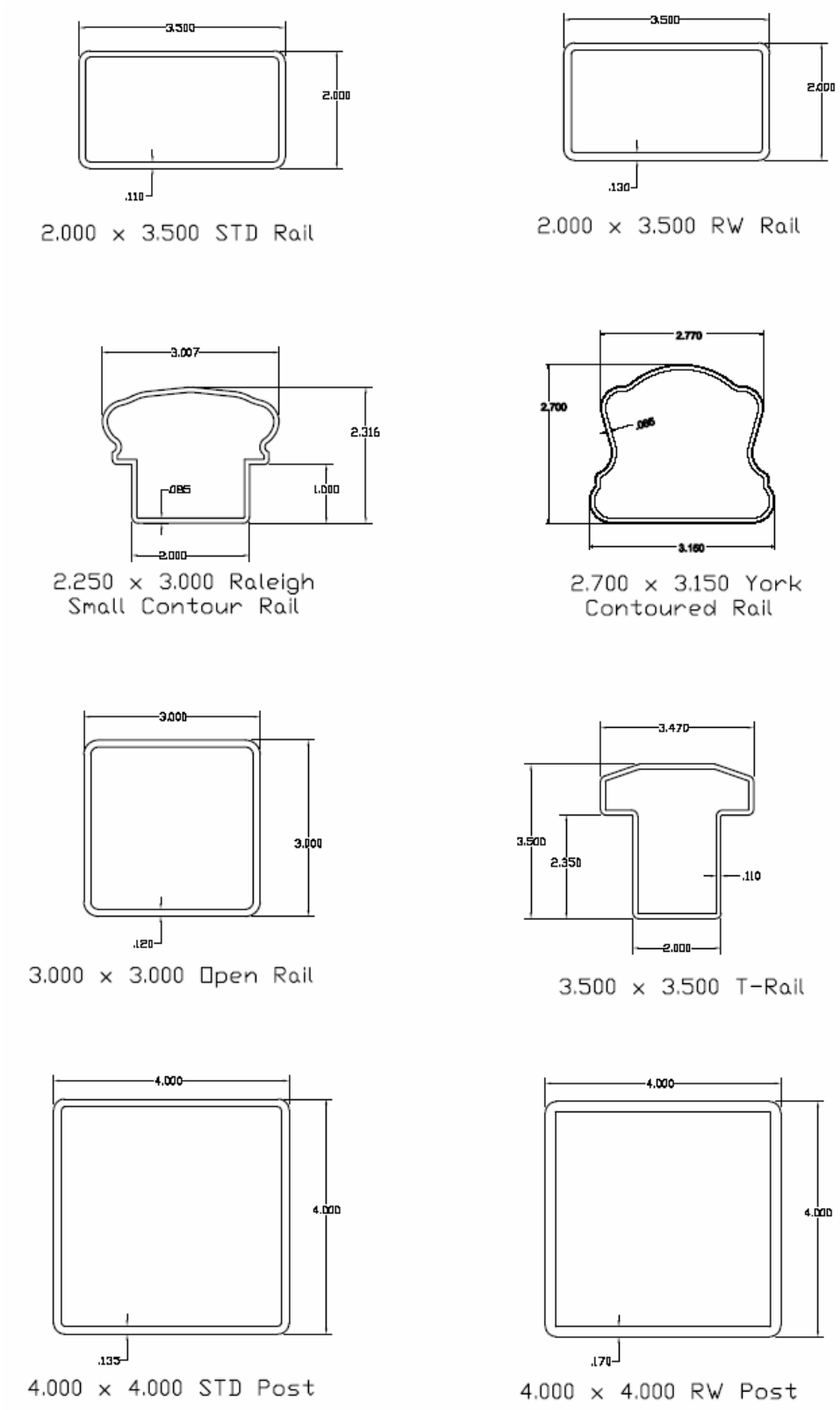

Figure 1 - Rail and Post Profiles

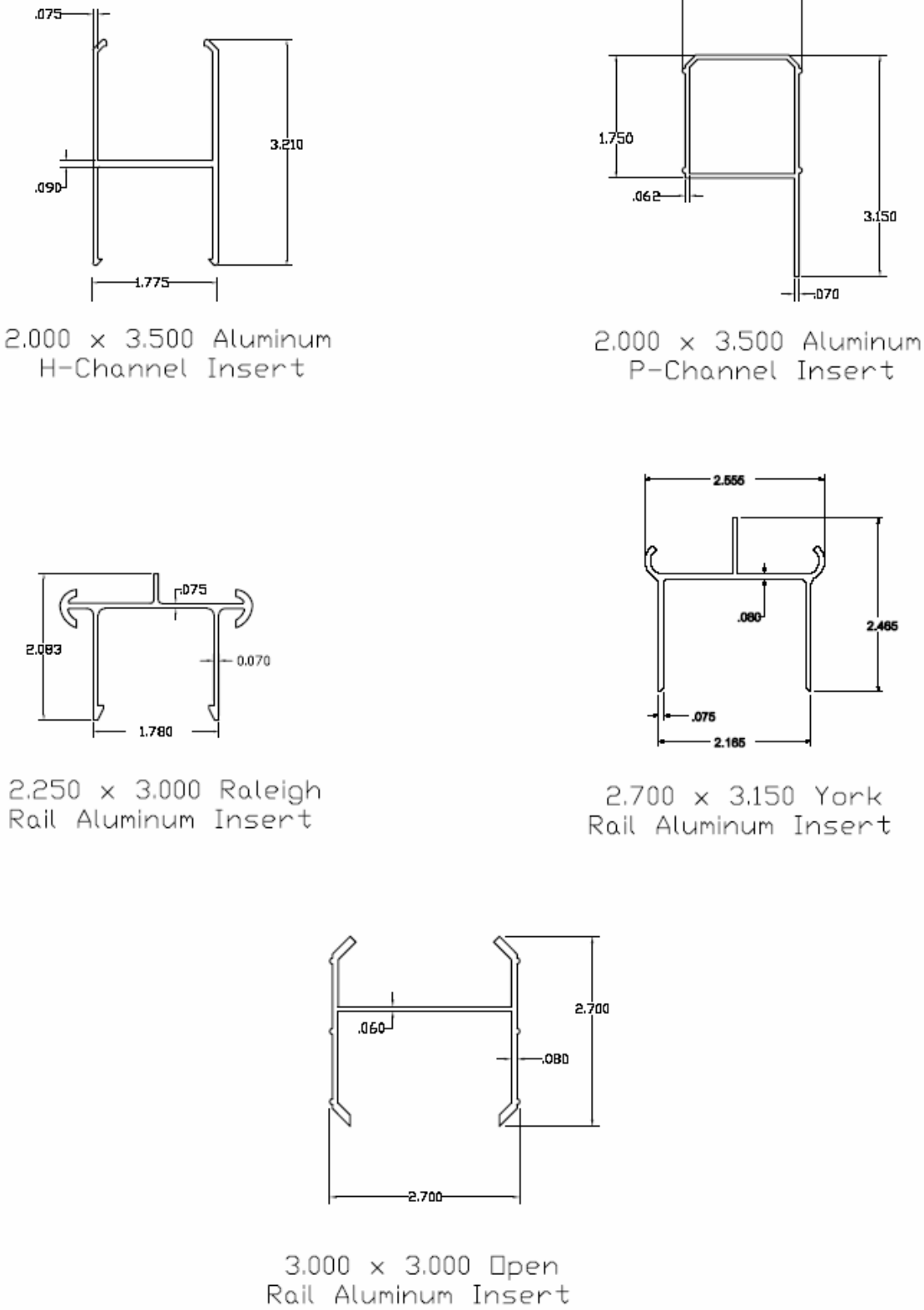

Figure 2 - Aluminum Inserts

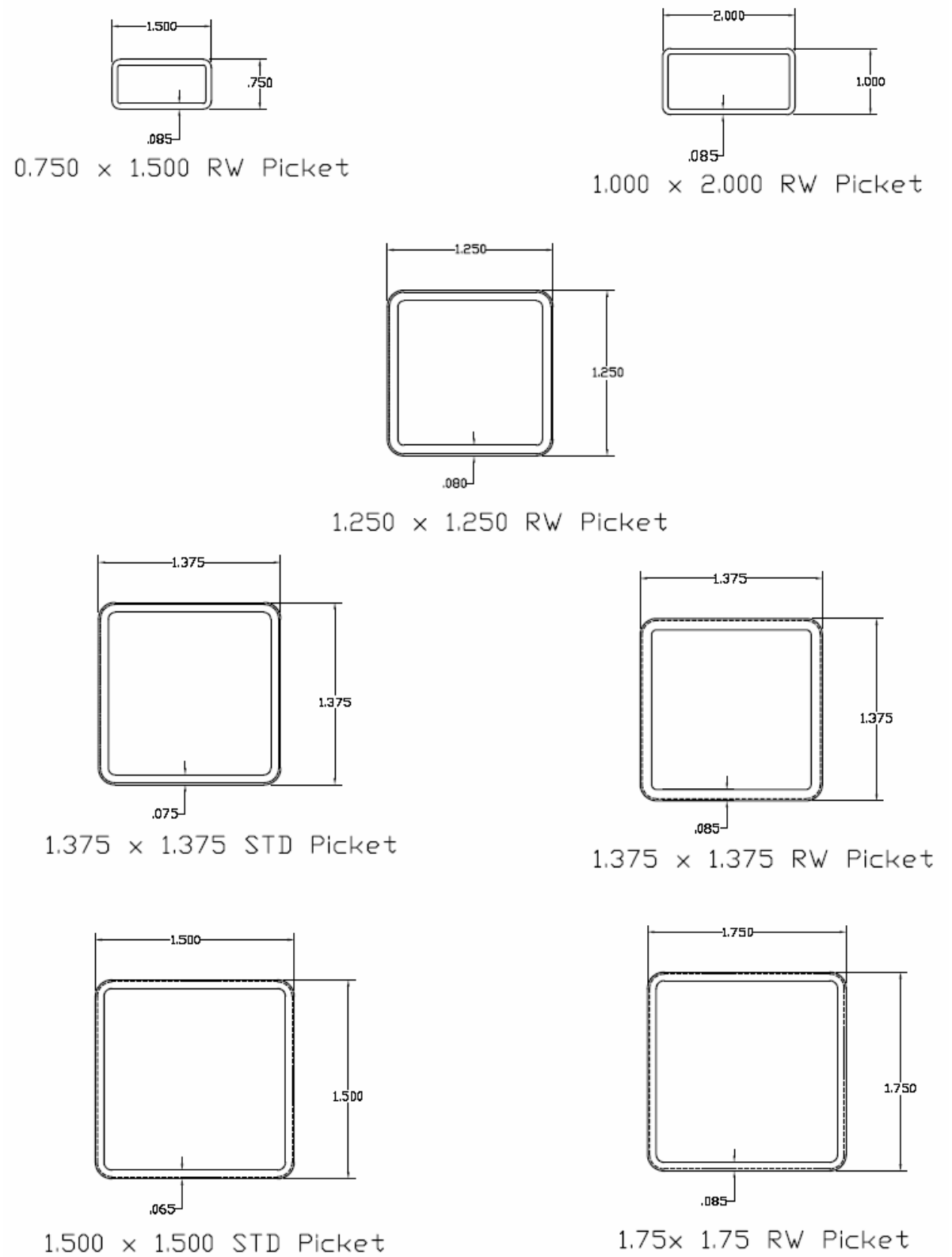

Figure 3 - Picket Profiles

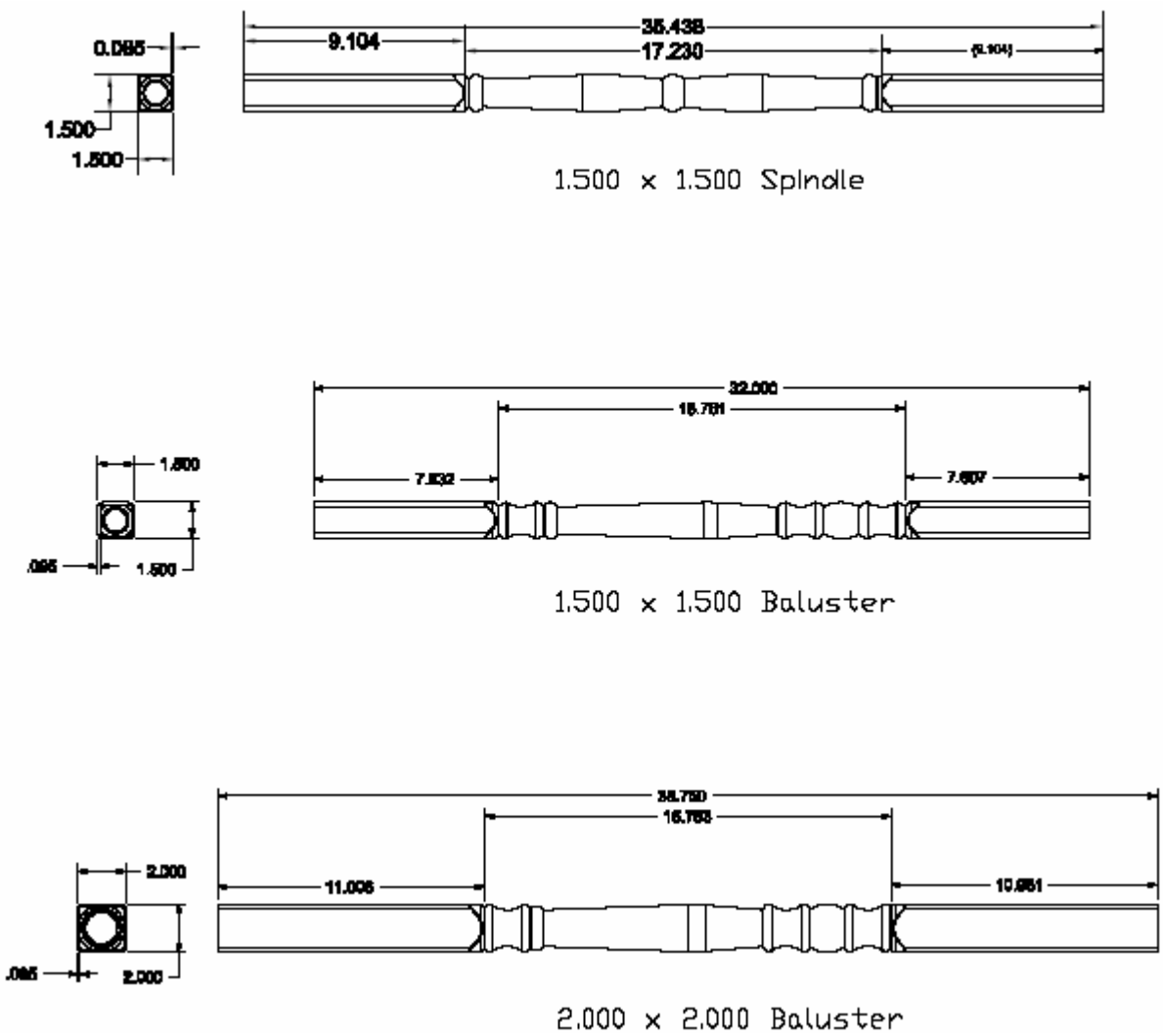

Figure 4 - Spindles and Balusters

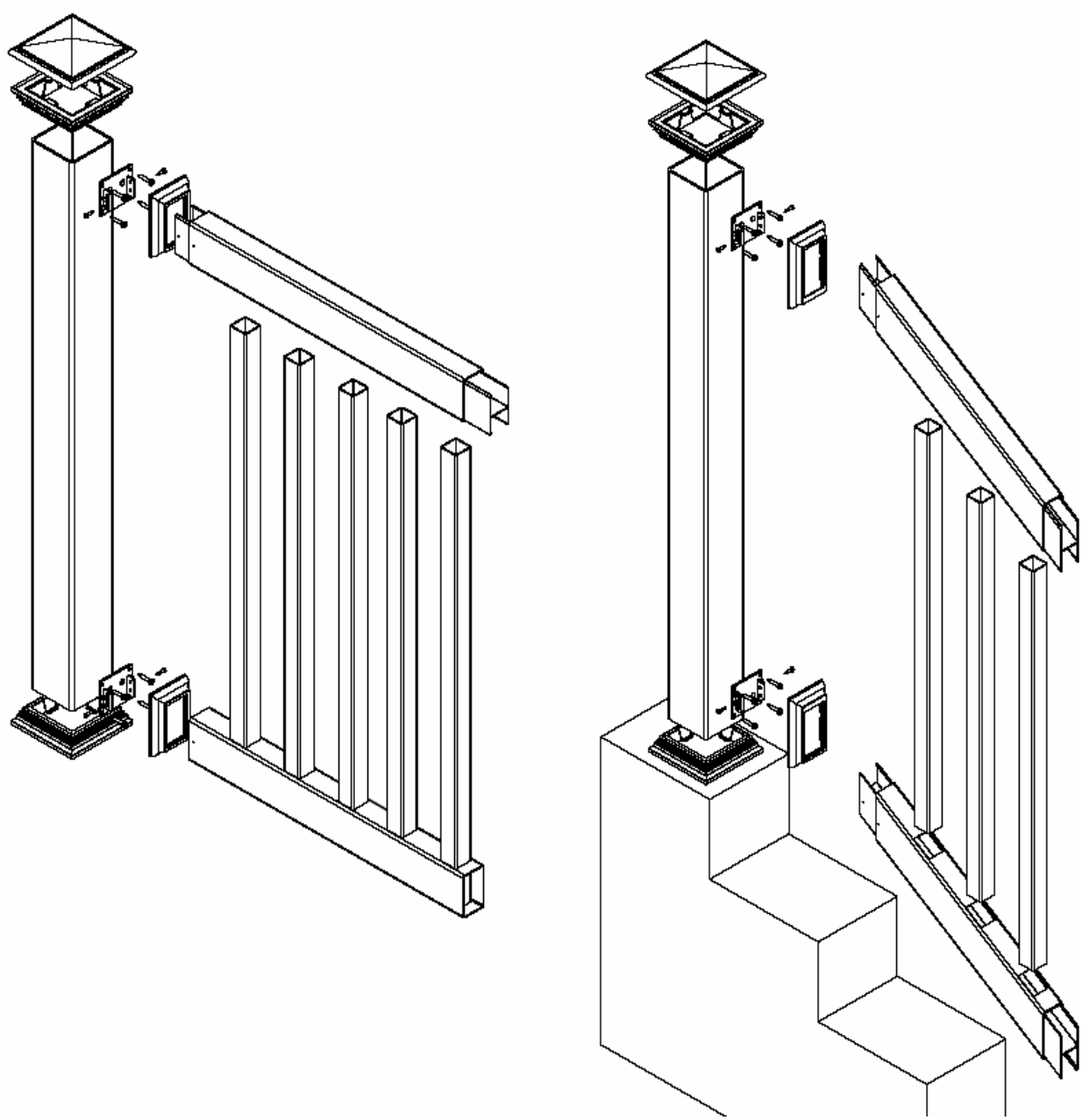

Figure 5 – 2 x 3-1/2 Open STD Rail (Level and Stair)

Bottom rail reinforcement not shown for level rail. See Table 2 for requirement.

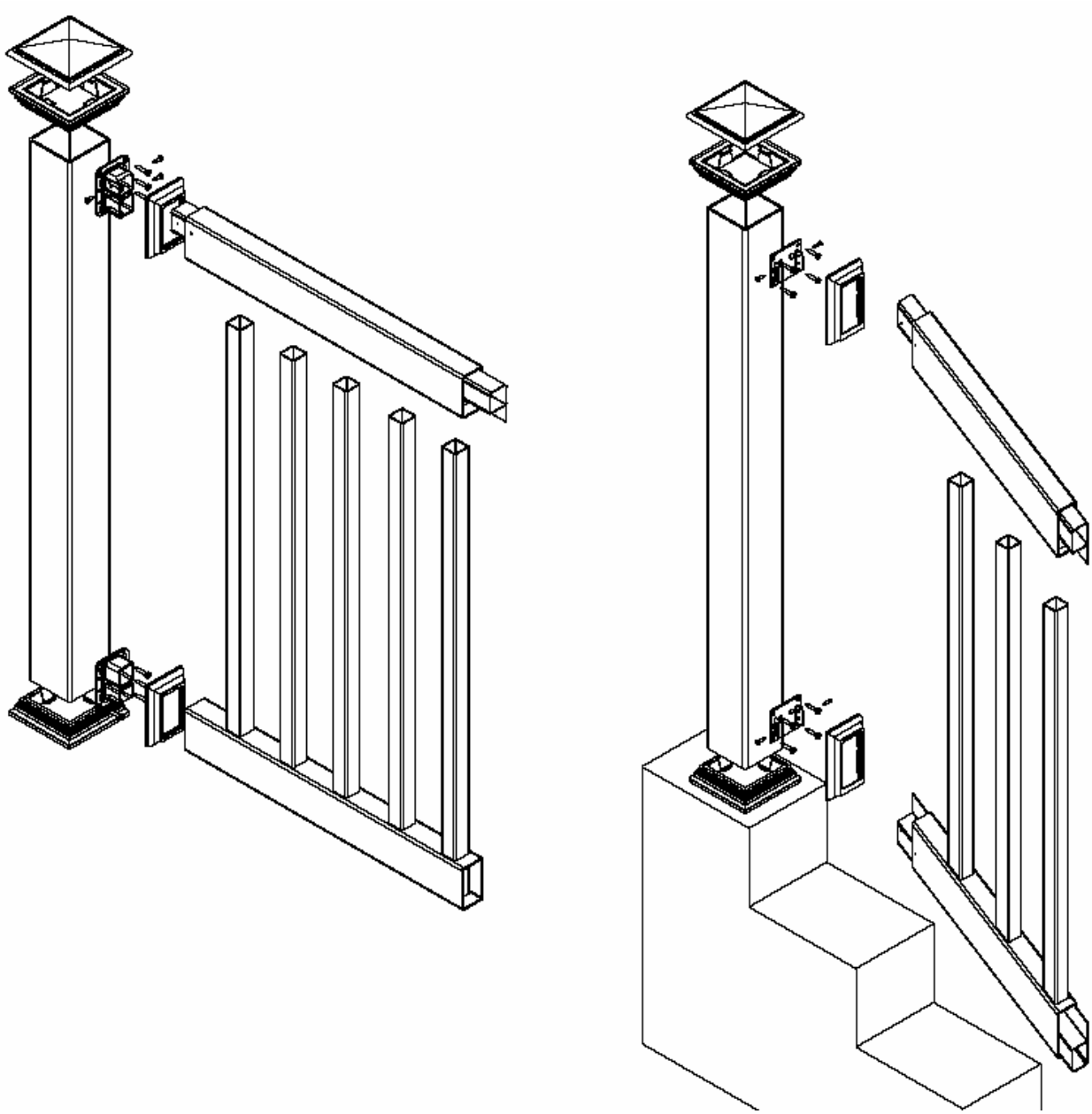

Figure 6 – 2 x 3-1/2 Open RW Rail

(Level and Stair)

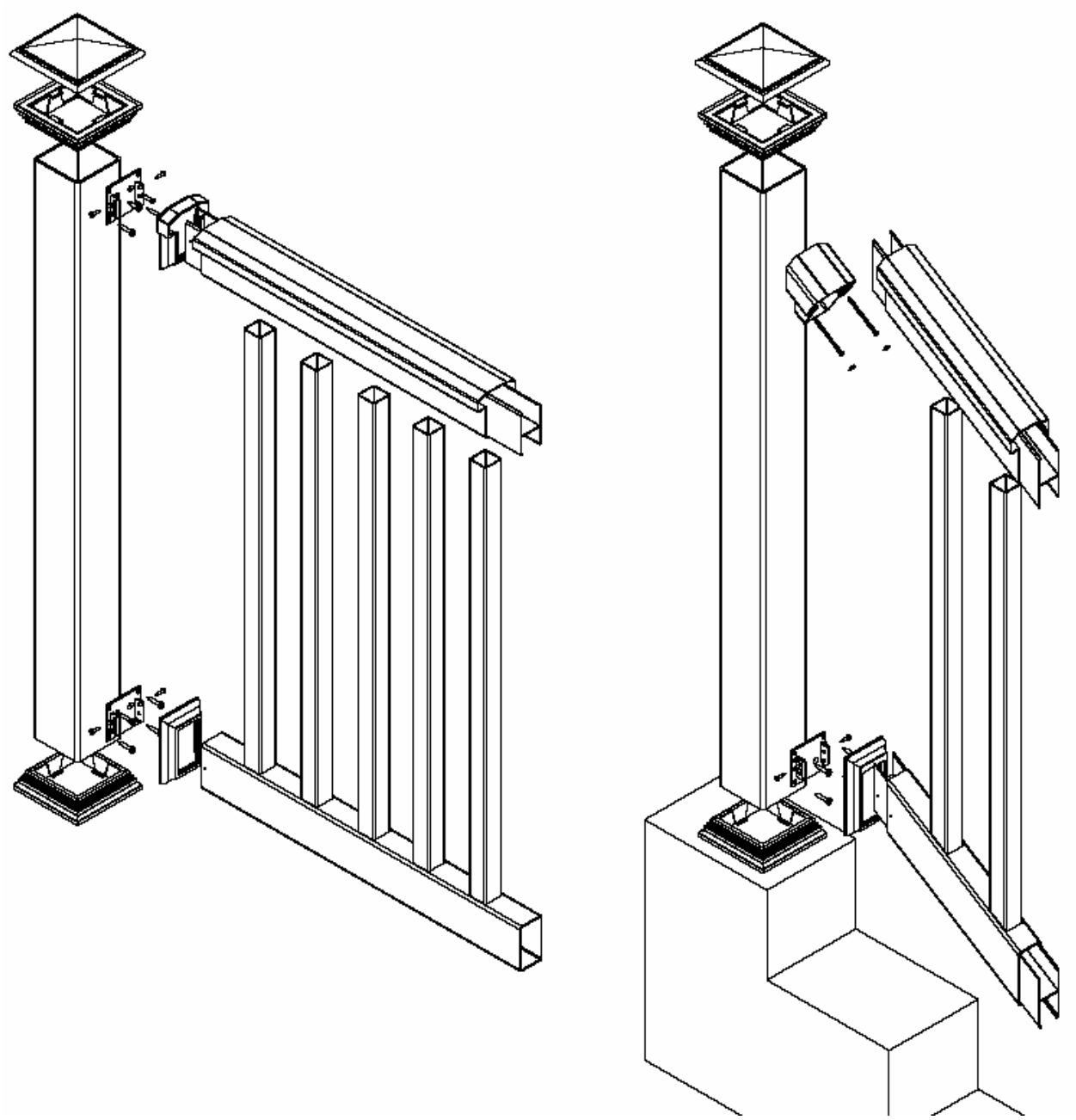

Figure 7 - T-Rail (Level and Stair)

Bottom rail reinforcement not shown for level rail. See Table 2 for requirement.

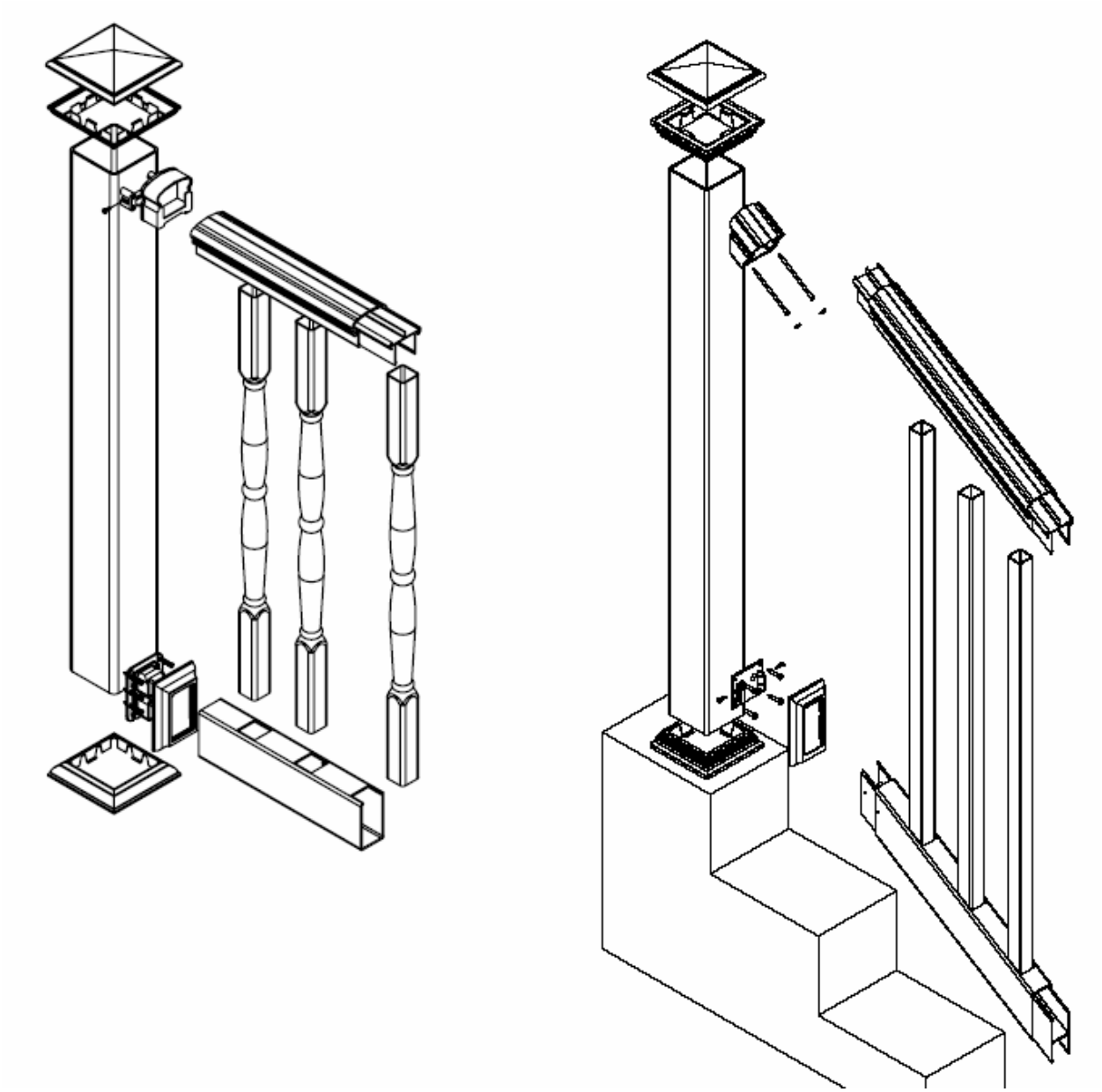

Figure 8 - Small Contour (Raleigh) Rail (Level and Stair)

Bottom rail reinforcement not shown for level rail. See Table 2 for requirement.

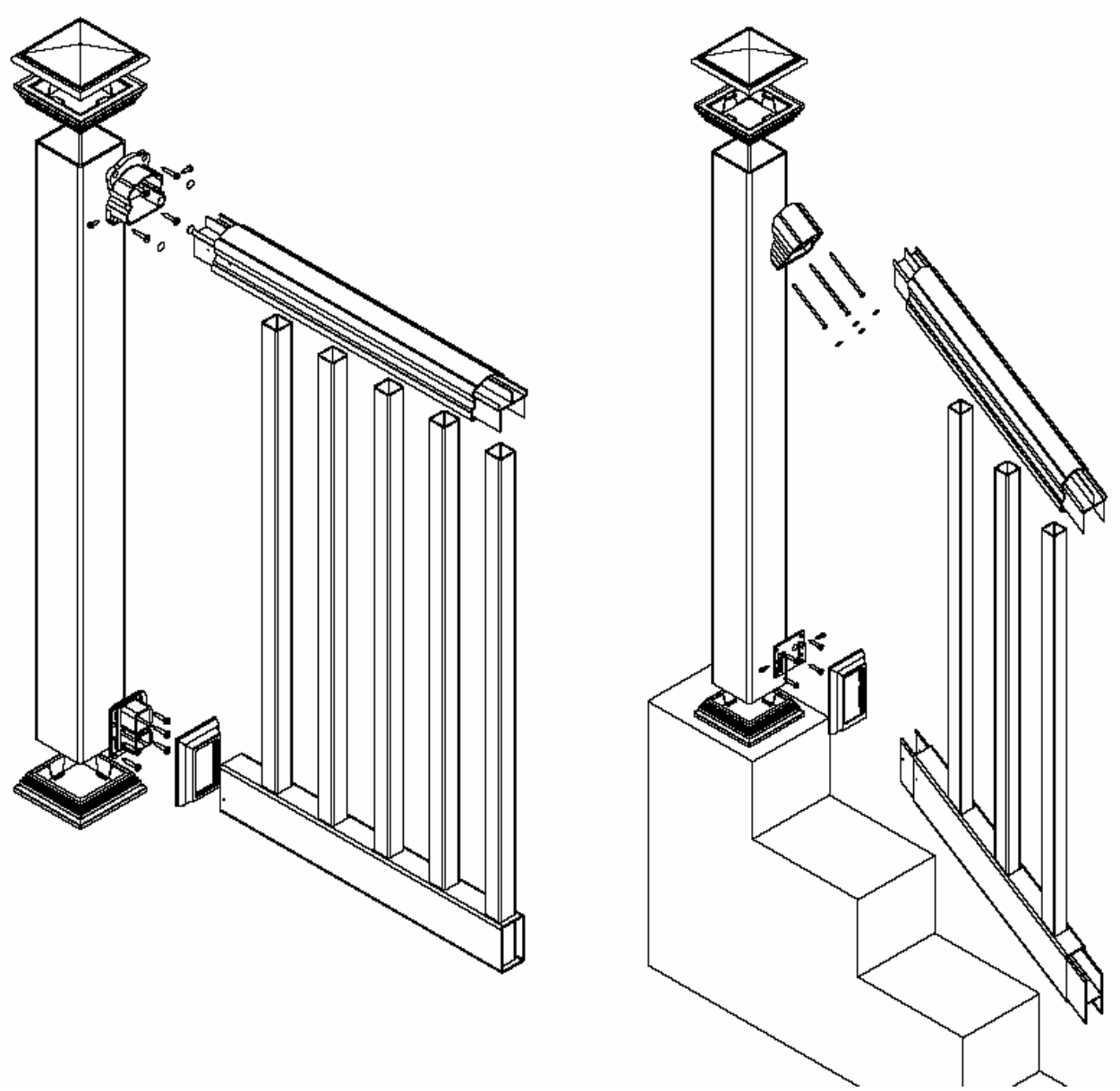

Figure 9 - Contoured Rail (York) (Level and Stair)

Bottom rail reinforcement not shown for level rail. See Table 2 for requirement.

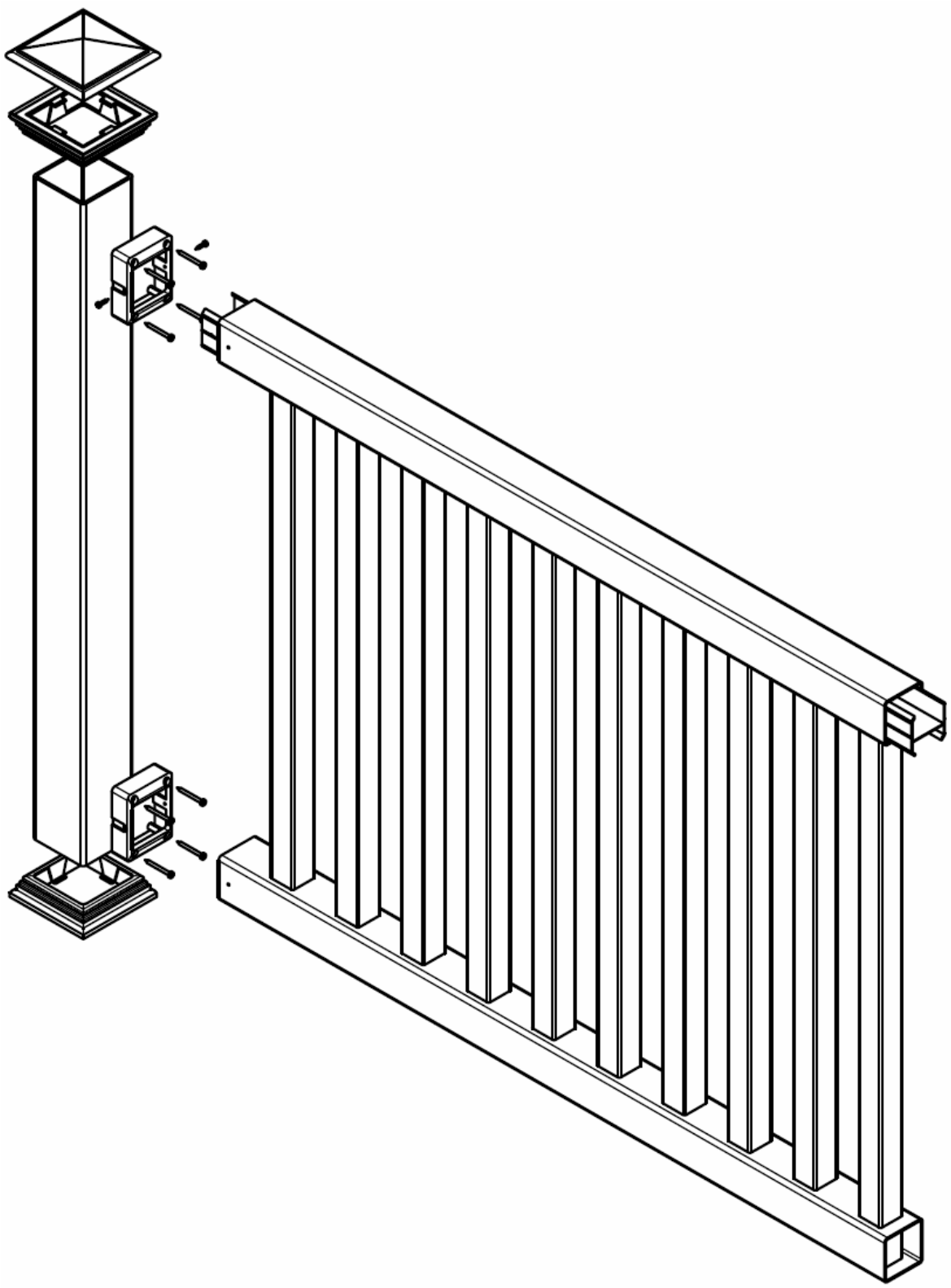

Figure 10 - 3 x 3 Rail

Bottom rail reinforcement not shown for level rail. See Table 2 for requirement.

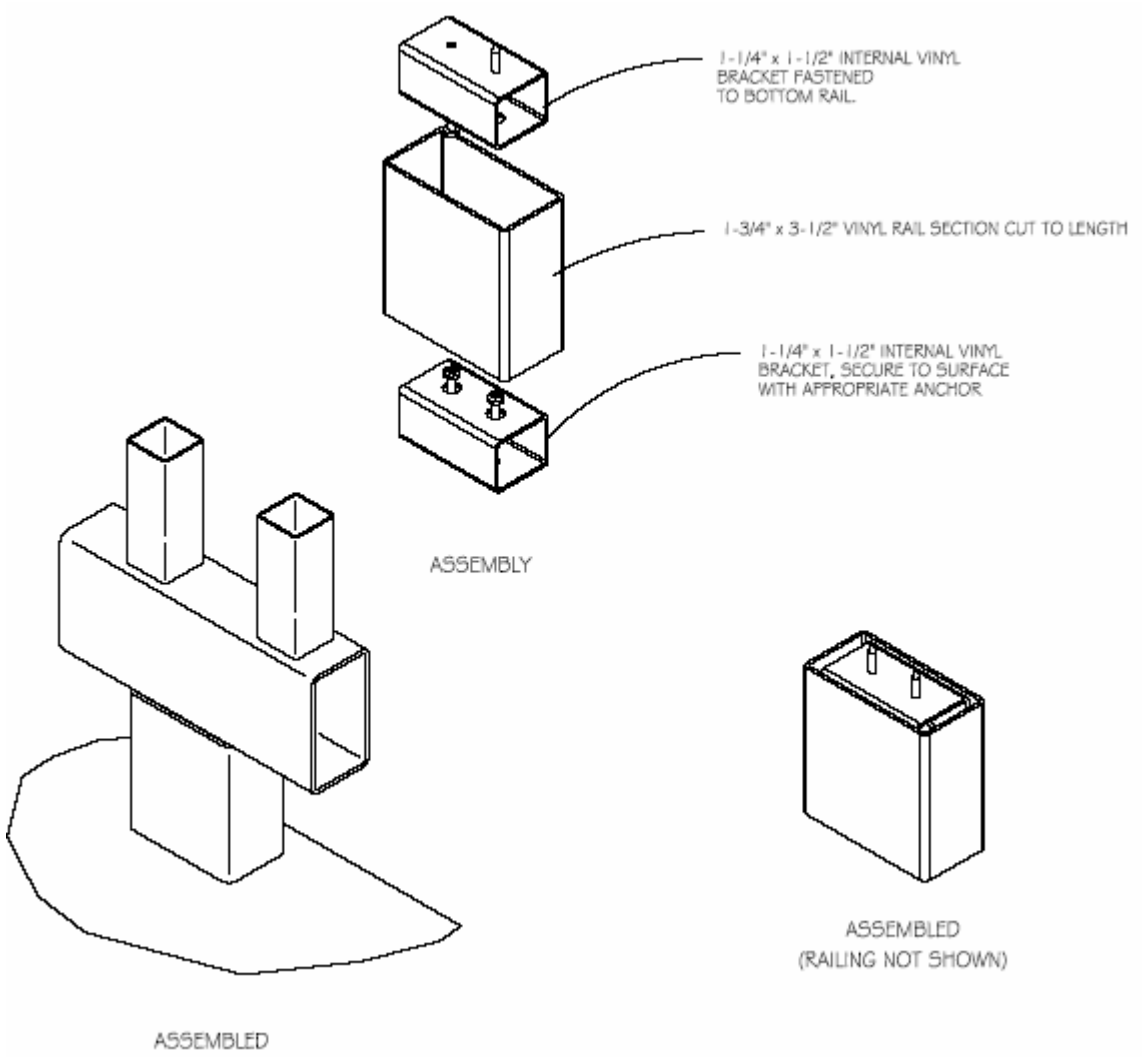

Figure 11 - Bottom Rail Intermediate Support (Foot Block)

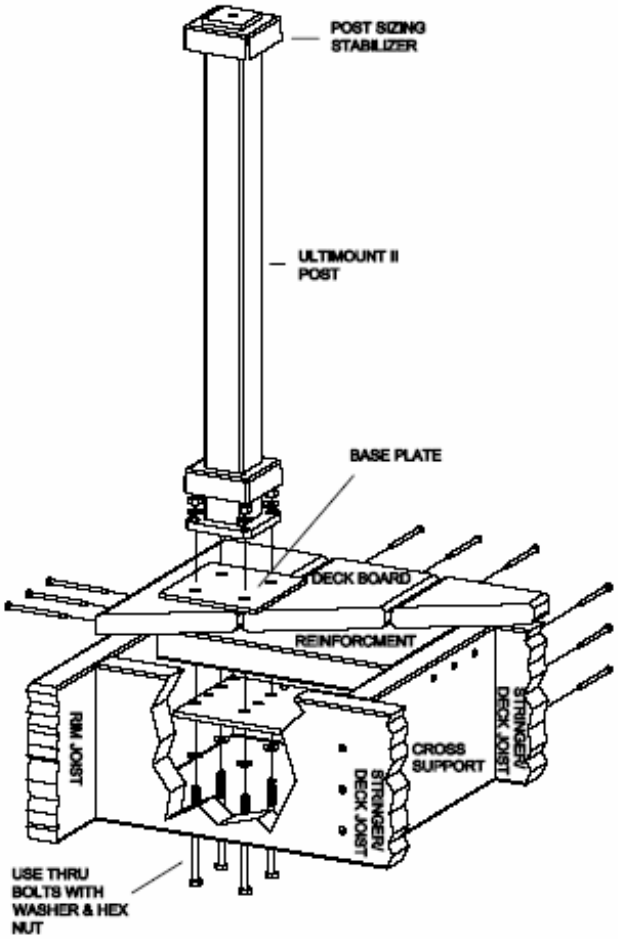

CORNER APPLICATION

Note:
Cross supports and reinforcement shown are 2x8 Southern Pine (treated) or approved equivalent fastened with #8 x 3" deck screws in the quantities shown.

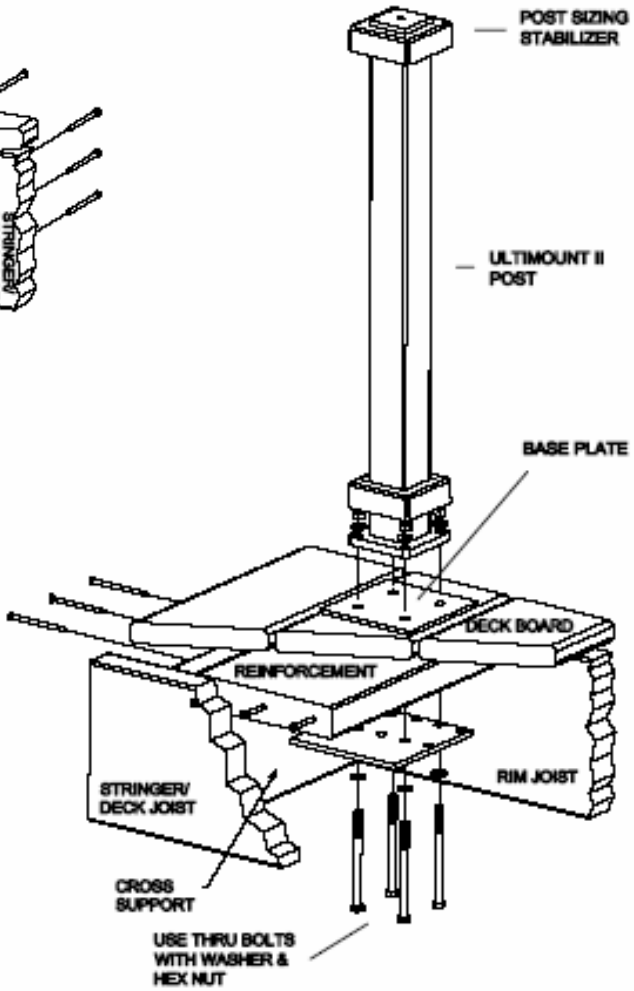

LINE APPLICATION

Figure 12 – UltiMount II™ Installation on a Wood Deck

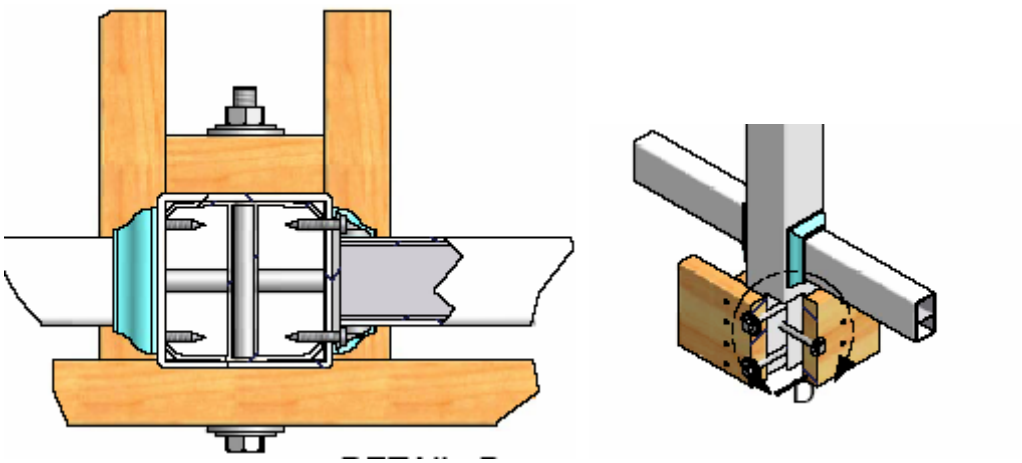

Figure 13 - Aluminum Tower Post Mount

Three 1/2" Bolts (2 Front & 1 Side) with structural framing on all four sides fastened with (4) #10x3" deck screws each member